REJUVENATION

www.rejuvenation.com

RIGDON

Thermostatic Shower Set

Includes SS-TH60 1/2" Mini Thermostatic Valve with Volume Control

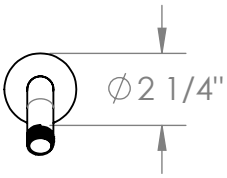

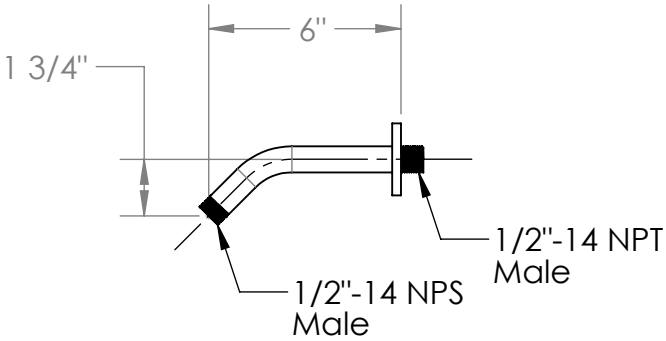

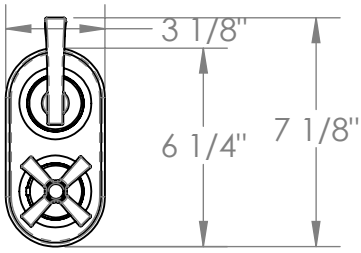

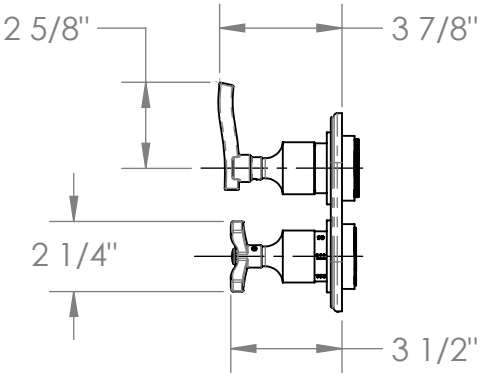

Meets the applicable requirements of ASME A112.18.1-2005/CSA B125.1-05, entitled “Plumbing Supply Fittings”

SS-TH60 – 1/2” MINIATURE THERMOSTATIC VALVE WITH VOLUME CONTROL
SS-TH70 – 1/2" MINIATURE THERMOSTATIC VALVE WITH 2-WAY DIVERTER
SS-TH80 – 1/2" MINIATURE THERMOSTATIC VALVE WITH 3-WAY DIVERTER

Features:

- Ability to pre-select water temperature – thus conserving water
- Compensates for water pressure fluctuations preventing scalding
- Safety button at 100°F prevents accidental scalding
- High flow rates allow for multiple shower applications

Specifications:

- Operating pressure is 20 PSI to 85 PSI
- When pressure is higher than 85 PSI a pressure reducer (fitted before the valve) is required.
- Temperature range is 60°F to 115°F
- Recommended supply setting is 45 PSI and 150°F

Note:

- DO NOT USE PLUMBER’S PUTTY ON ANY OF THE BRASS COMPONENTS
  This will cause the finish to tarnish and void the warranty. A non-corrosive Alkoxy Silicone is recommended.
- DURING SWEATING OF LINES DO NOT OVERHEAT CASTING
  Overheating may cause damage to internal mechanism and void the manufacturer’s warranty as well as increase the risk of scalding.
- COPPER ADAPTORS MAY BE REQUIRED TO COMPLETE YOUR INSTALLATION

- Shipping weight (lbs.): 4
- Shipping dimension (in.): 8 x 11 x 5

Diagram 1: Flow Rate Vs. Pressure

SS-TH60

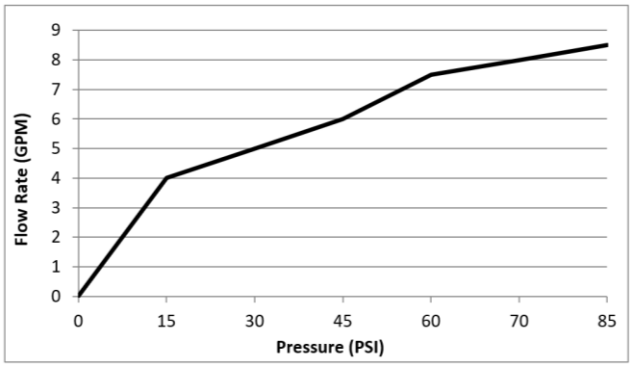

SS-TH70/80

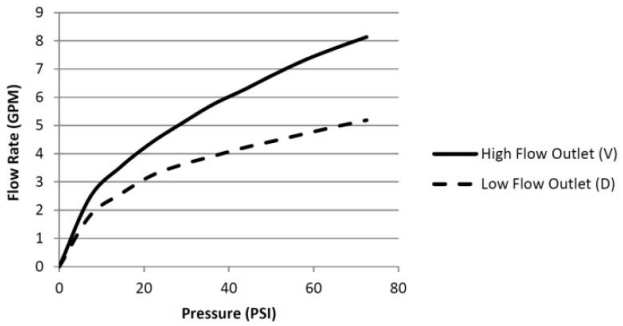

Valve Installation

1. Flush the lines of all dirt and debris. Failure to completely flush the lines will cause valve failure and will void the manufacturer’s warranty.
2. Fit the valve on the wall without removing the plastic cover on the control spindle. Turning the control spindle will change the temperature setting which is pre-calibrated at the factory.
3. Connect the hot water supply to the left inlet of the valve (hot marked with “H”) and cold supply to the right inlet (cold marked with “C”).

4. Use the **Plastic Mudguard (1)** (part of the package) to position the **Valve (2)** in the wall. This is done by checking the markings on the mudguard for the minimum/maximum settings which is 2 3/8” to 2 7/8” from the center of the valve inlets to the finished wall.

Diagram 2: Plastic Mudguard

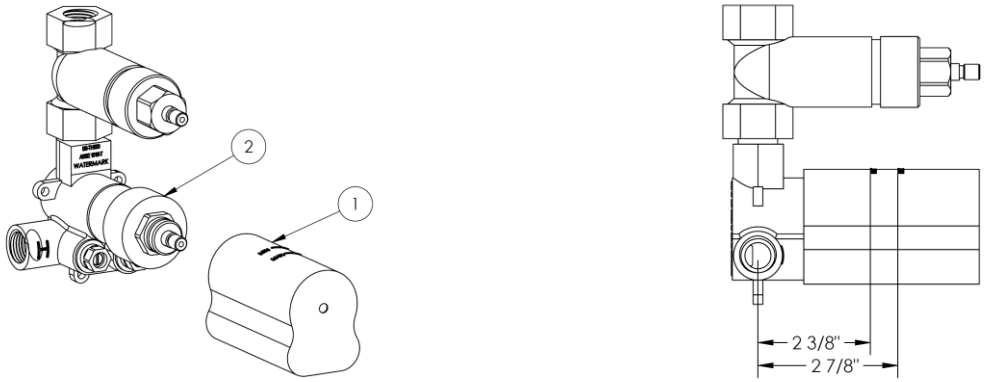

5. Connect the outlet pipe(s). Install tile stops/volume controls between the thermostatic valve and each device to be operated.

NOTE: Port marked V will output about 6.5 gpm and port marked D will put out about 4.5 gpm at 45 psi.
NOTE: Shared ports are only between ports marked D1 and D2 on the SS-TH80 valve.

Trim Installation (see Diagram 4)

1. Screw **Temperature Control Dome (1)** and **Volume Control Dome (9)** onto valve.
   NOTE: The **Temperature Control Dome (1)** has a larger opening than the **Volume Control Dome (9).**
2. Slide the **Thermostatic Face Plate (3)** onto the valve by sliding over the **Temperature Control Dome (1)** and **Volume Control Dome (9)** and hold in place.
3. Screw **Lock Rings (4)** into **Dome Sleeves (2)**.
4. Lock the **Thermostatic Face Plate (3)** securely against the wall by screwing **Dome Sleeves (2)** with **Lock Rings (4)** onto **Temperature Control Dome (1)** and **Volume Control Dome (9)**.
5. Ensure **Temperature Limit Stop Ring (5)** is installed with red dot at 12 o’clock position
6. Install **Temperature Control Post (6)** onto valve with push button at 12 o’clock position and install **Temperature Control Handle (8)** onto **Temperature Control Post (6)**.
   Note: Some heavier lever handles come with friction washers to prevent rotation due to gravity. The thicker of these washers is for use with this valve when needed (see Diagram 3).
7. Install **Volume Control Post (10)** onto valve and install **Volume Control Handle (12)** onto **Volume Control Post (10)**.

Diagram 3

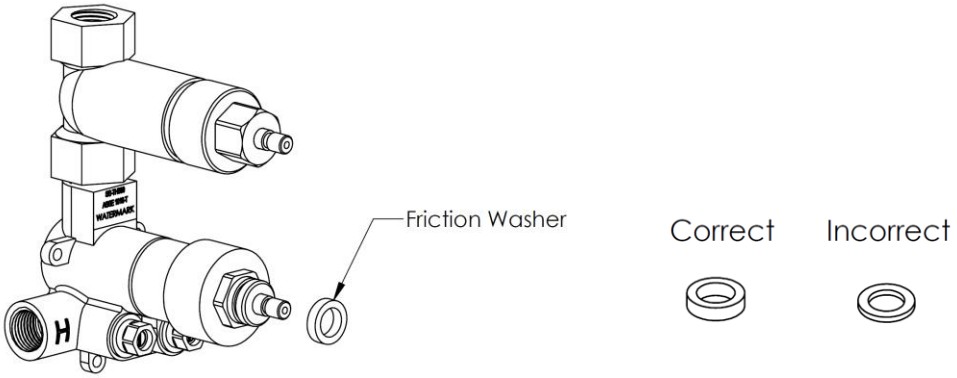

Diagram 4: Representative Trim

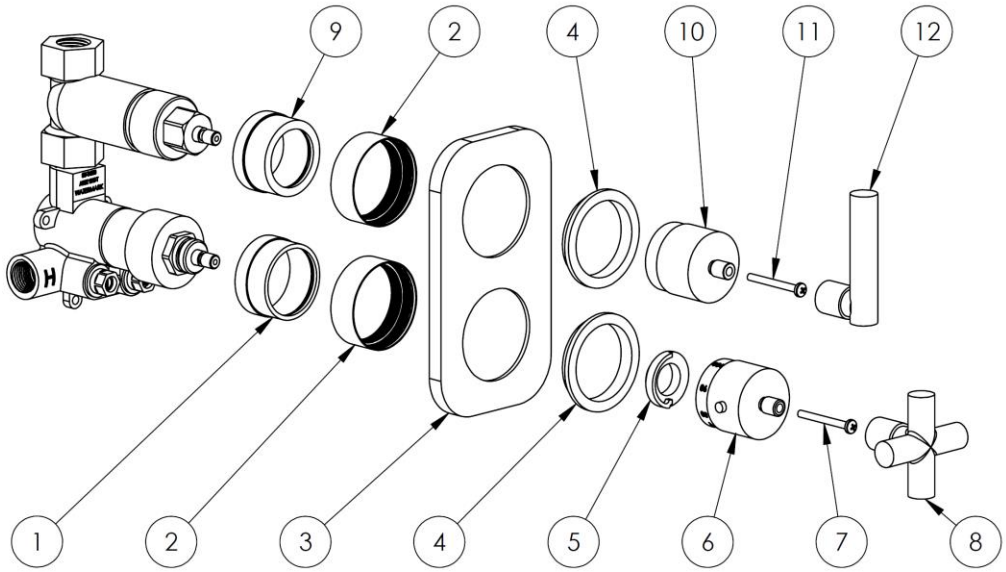

Parts Checklist						
Carefully remove all parts from the box. The following parts should be included.						
Item #	**Description**	**Qty.**		**Item #**	**Description**	**Qty.**
1	Temperature Control Dome	1		7	Temperature Control Screw	1
2	Dome Sleeve (raw brass)	2		8	Temperature Control Handle	1
3	Face Plate	1		9	Volume Control Dome	1
4	Lock Ring	2		10	Volume Control Post	1
5	Temperature Limit Stop Ring	1		11	Volume Control Screw	1
6	Temperature Control Post	1		12	Volume Control Handle	1

Temperature Setting

The delivered temperature of the valve varies depending on the temperature of the supplied hot water. The valve is factory set at a supplied temperature of 149°F under balanced pressures. Depending on your preferred hot water temperature setting, it may be necessary to adjust the calibrations of the valve. The limit override button is preset at 100°F and can be adjusted as described below.

1. Select 100°F on the control handle.
2. Without turning the handle, remove the handle by unscrewing the screw and pulling off (screw may be concealed and/or fastened with set screws).
3. Use a thermometer to check the delivered temperature on one of the outlets.
4. Adjust water temperature to 100°F by hand turning the cartridge stem slowly left or right.
5. Ensure that the temperature limit stop-ring in installed with red dot at 12 o'clock position.
6. Push the handle back on the valve with the push button at the 12 o'clock position and fasten in place.

Diagram 5: Temperature Limit Stop Ring

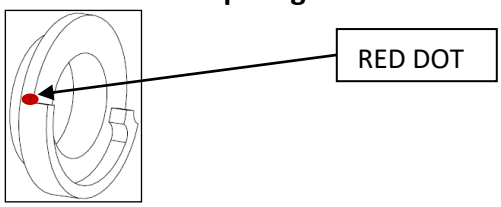

Removal and Maintenance of Cartridge (see Diagram 6)

This thermostatic cartridge has screens to prevent dirt and unwanted particles from damaging the valve. Clogged screens can cause reduced flow and inefficient temperature mixture by the valve. You can easily clean the screens by following the instructions below.

1. Remove the trim by following the Trim Installation steps above in reverse.
2. Shut off the water inlets by tightening the two screws at the two check stop valves.
3. Pull off **Stem Adapter (6)** and **Tooth Adapter (5)** from valve and unscrew **Thread Adapter (4)** from valve with a 23mm socket wrench or other adjustable wrench in a counterclockwise direction.
4. Unscrew **Cartridge Nut (3)** with a 23mm socket wrench or other adjustable wrench in a counter-clockwise direction and gently pull out **Cartridge (2)**.
5. Clean the screens and rinse with water. If necessary, soak in a 50/50 mix of white vinegar/ water or a de-scaling agent until all dirt is dissolved. Grease the o-rings with a silicone based grease and wipe the housing with a wet cloth before reassembling.
6. Reassemble the valve by reversing these instructions. Make sure the red dot on the temperature limit stop ring and push button on the handle are both aligned in the 12 o'clock position. Temperature may need to be reset as per instructions above.

Note: To prevent the handle from accumulating mineral build up which can cause the handle to "lock up," the handle must be turned on an occasional basis.

Diagram 6: Cartridge Removal/Check Valve Removal

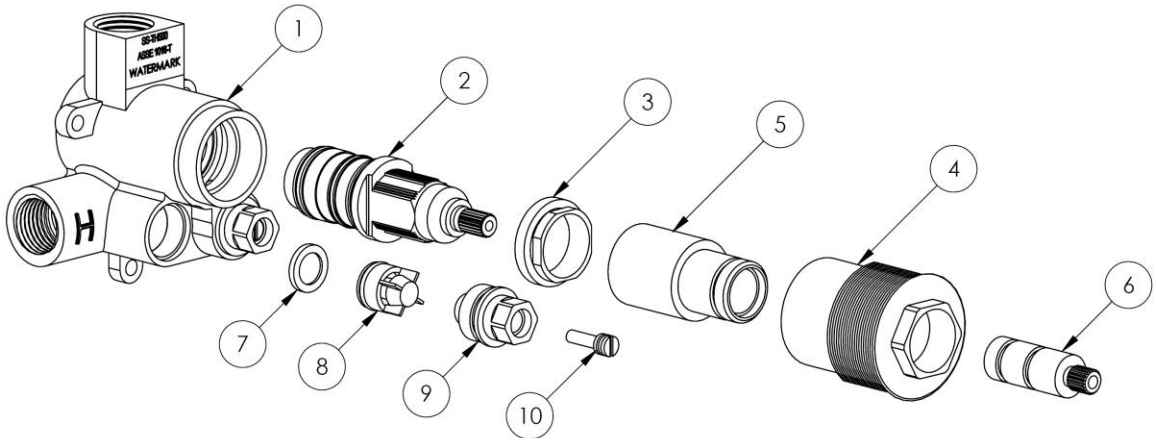

Parts List		
Item #	**Description**	**Qty.**
1	Valve Body	1
2	Cartridge	1
3	Cartridge Nut	1
4	Thread Adapter	1
5	Tooth Adapter	1
6	Stem Adapter	1
7	Debris Screen	2
8	Check Valve	2
9	Service Stop Nut	2
10	Service Stop Screw	2

Troubleshooting		
Malfunction	**Cause**	**Remedy**
Cannot regulate temperature	Dirt in check valves Water supply reversed Valve installed upside down	Remove and clean check valves Reverse hot and cold supply lines Reverse valve
Hot and cold water do not mix	Lack of water pressure at one of the inlets Blocked shower head	Correct water pressure at source Remove shower head and clean debris. If necessary, soak in a 50/50 mix of white vinegar/ water or a de-scaling agent until all dirt is dissolved.
Water not hot enough / Water too hot	Debris in check valves Valve not properly calibrated Water heater setting incorrect	Remove and clean check valves Calibrate valve following instructions on page 4 Adjust water heater temperature setting
Temperature selected on handle is different than actual water temperature	Debris in check valves Valve not properly calibrated Uneven hot & cold water pressure	Remove and clean check valves Calibrate valve following instructions on previous page Check and adjust water pressure for both hot & cold supply lines
Handle does not turn	Mineral build up	Remove and clean cartridge following instructions above
Low water pressure	Low water pressure Debris in cartridge Debris in check valves Blocked shower head	Check and adjust water pressure at source Remove and clean cartridge following instructions above Remove and clean check valves Remove shower head and clean debris. If necessary, soak in a 50/50 mix of white vinegar/ water or a de-scaling agent until all dirt is dissolved.
Leaking shower head	Fault cartridge in wall stop/ volume control	Repair or replace cartridge in wall stop/ volume control
Valve body too deep into wall	The measured rough in or finished wall surface is incorrect	Install the proper extension kit: SS-EXT51

Diagram 7: Dimensional Drawings

SS-TH60:

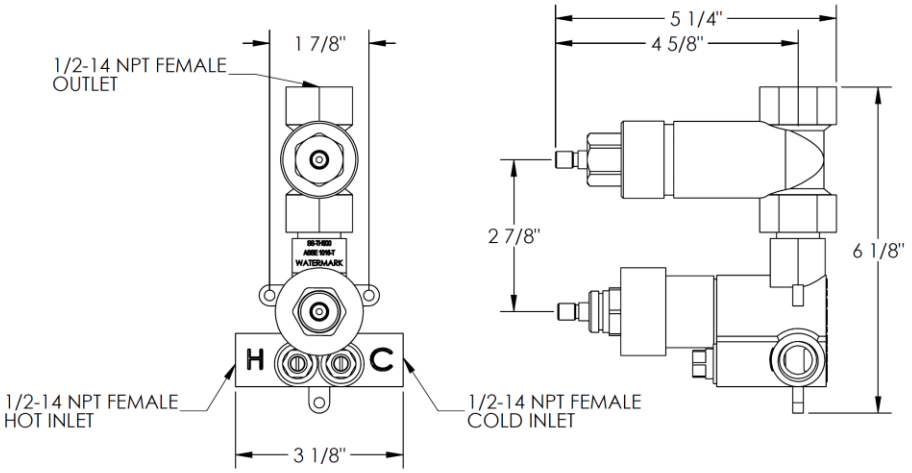

SS-TH70:

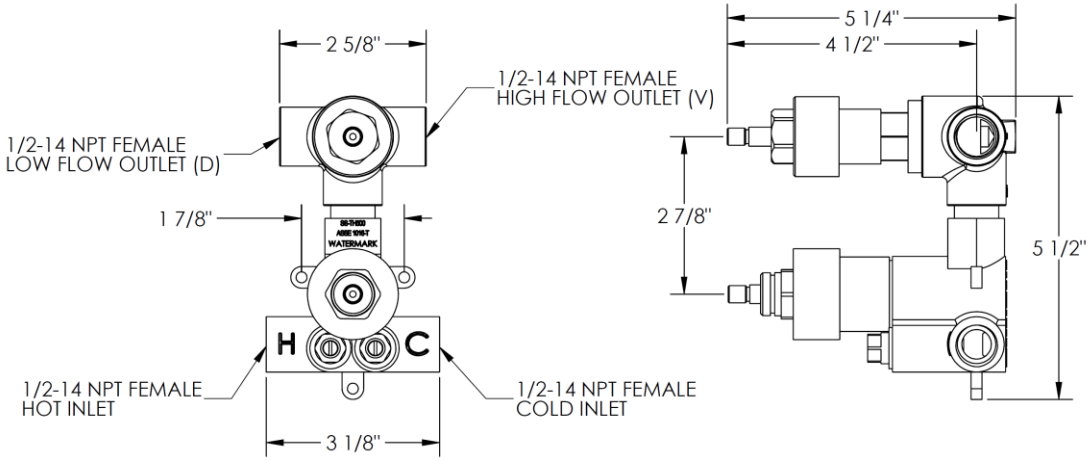
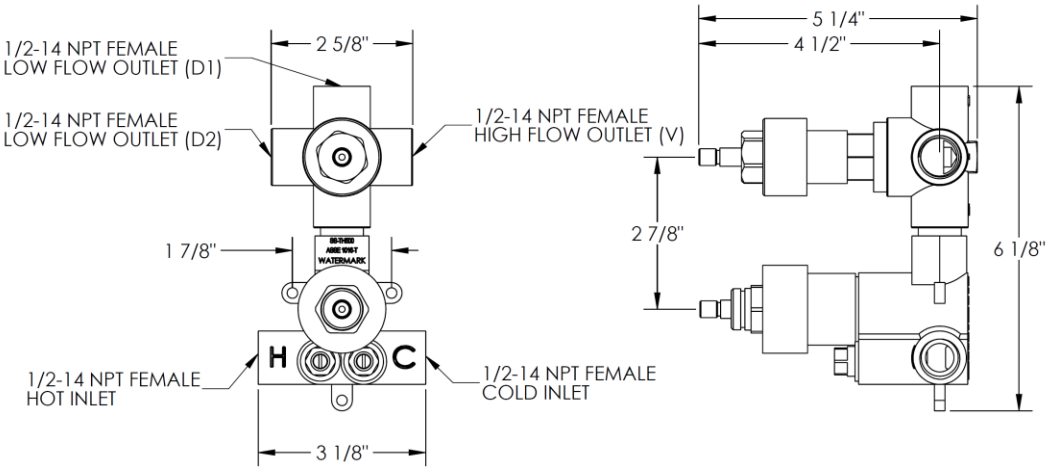
SS-TH80: